```
PULGA40M
SPICE SIMULATIONS REPORT
EDUARDO ALONSO, EA3GHS
21/OCT/2008
```

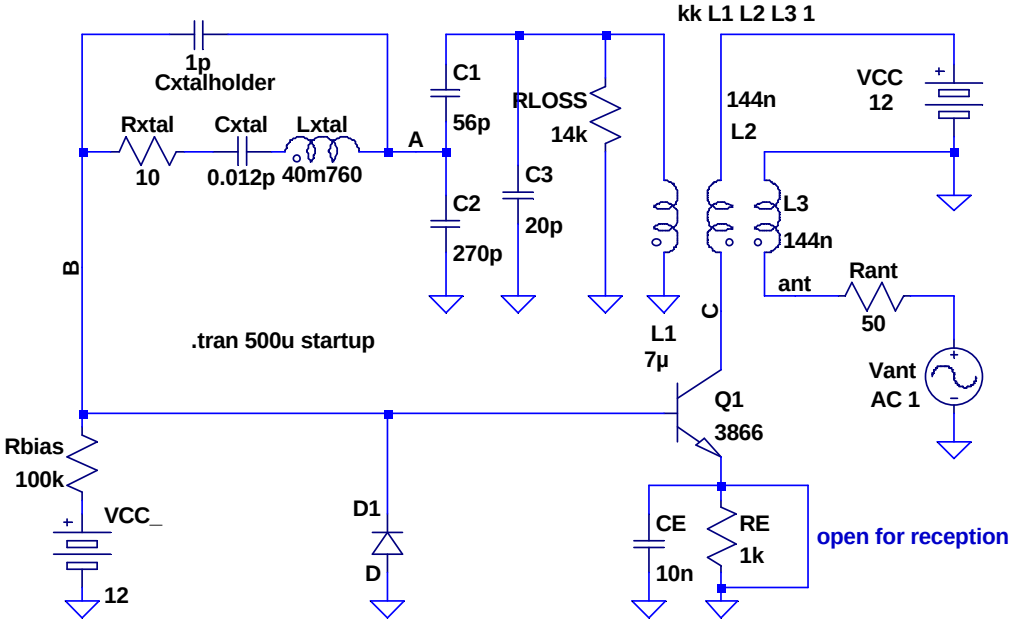

.model 3866 NPN (IS = 9.798605E-15 BF = 145.568899 VAF = 64.3030691)

```
DC BIAS POINT
```

```
Name:       q1
Model:      3866
Ib:         1.13e-04
Ic:         1.93e-02
Vbe:        7.28e-01
Vbc:       -1.13e+01
Vce:        1.20e+01
BetaDC:     1.71e+02       171
Gm:         7.45e-01       745 mmho
Rpi:        2.29e+02       229 ohm
Rx:         0.00e+00
Ro:         3.92e+03       3920 ohm

Cbe:        0.00e+00       model without internal capacitors
Cbc:        0.00e+00
Cjs:        0.00e+00
BetaAC:     1.71e+02
Cbx:        0.00e+00
Ft:         0.00e+00
```

Transistor and diode currents in TRANSMISION mode

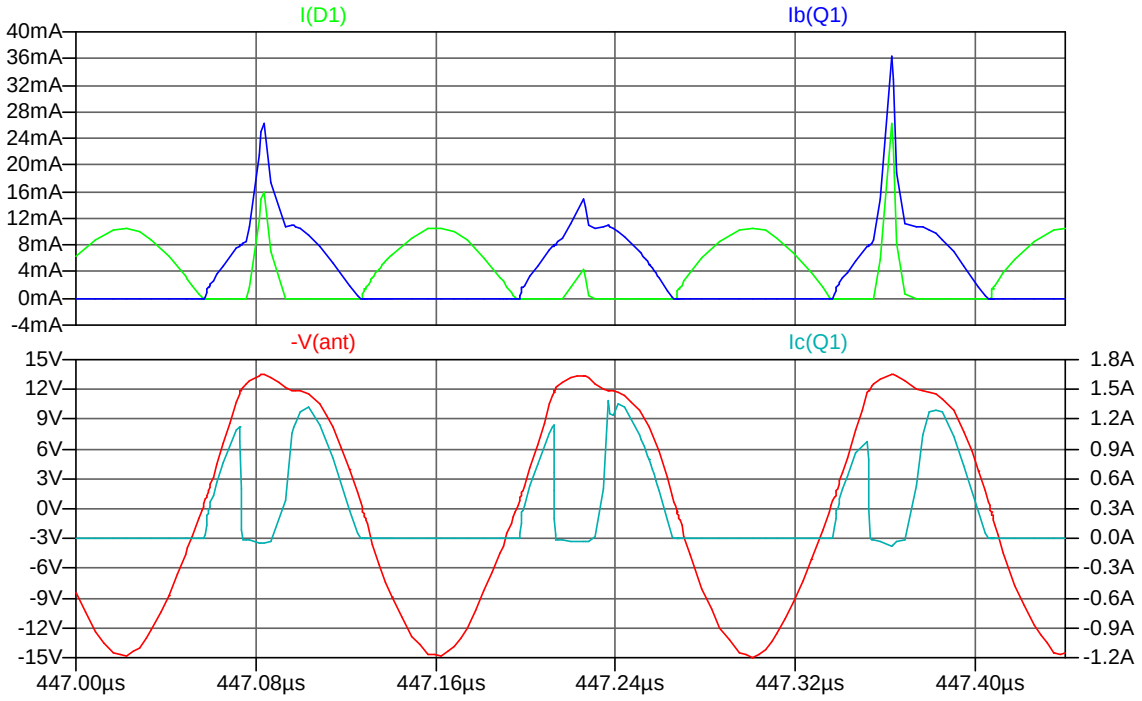
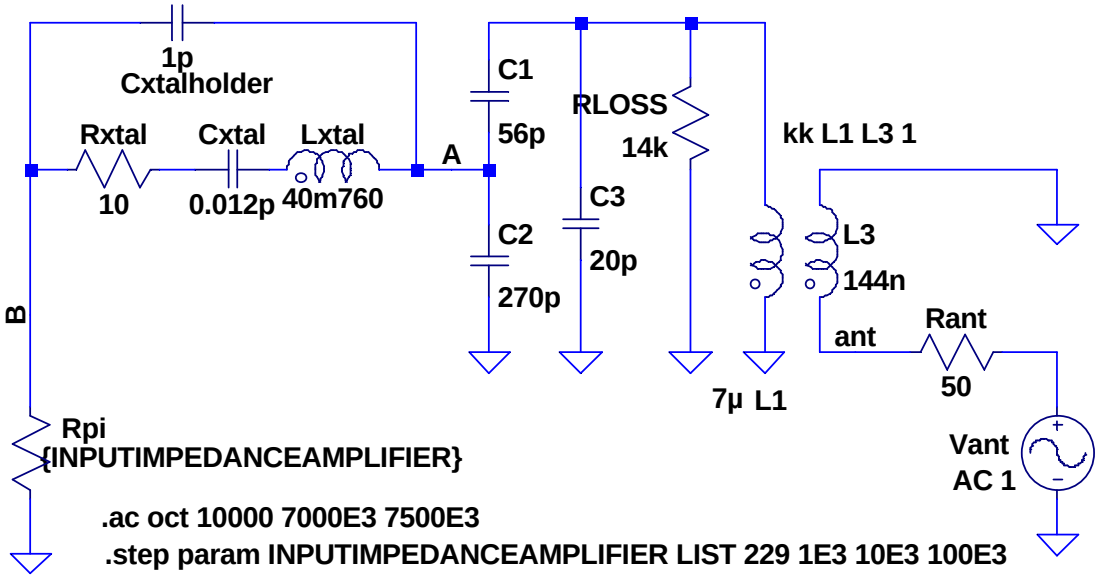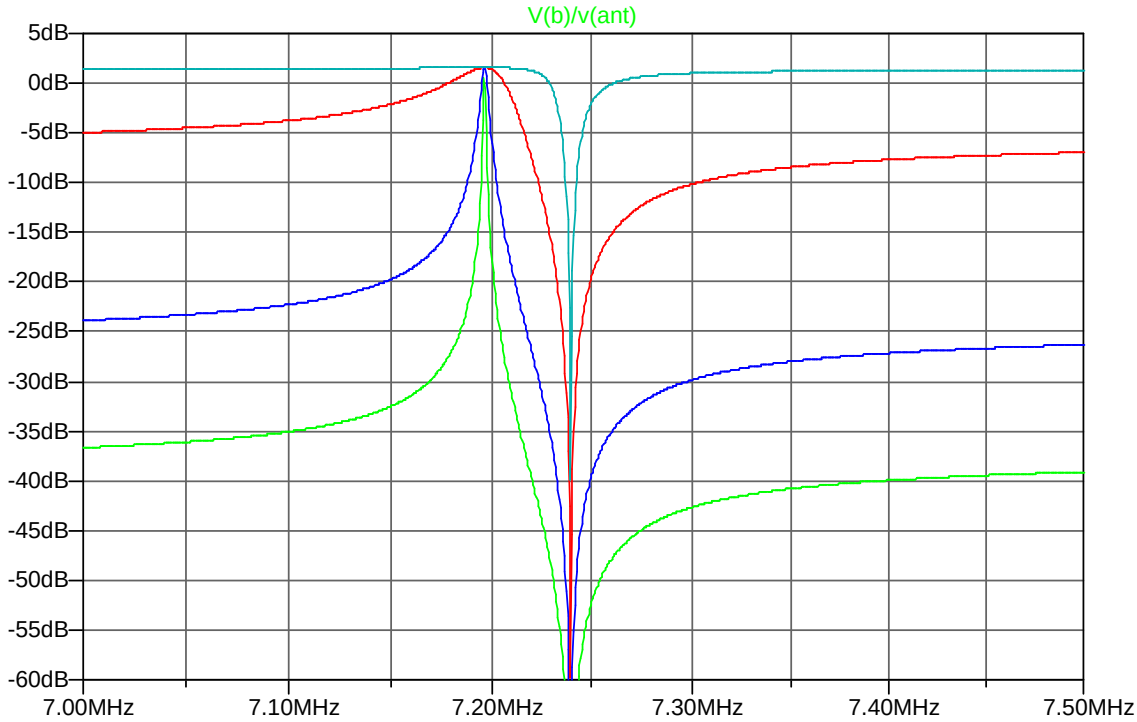
FEEDBACK NETWORK ANALISYS AND INFLUENCE OF AMPLIFIER INPUT IMPEDANCE